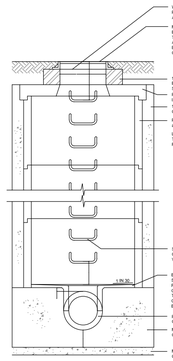

DEPTH OF COVER TO CROWN
1.0m MIN TO 3.0m MAX

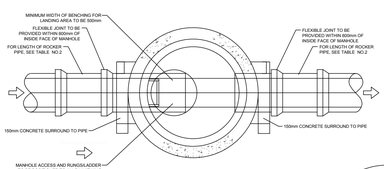

SECTIONAL PLAN

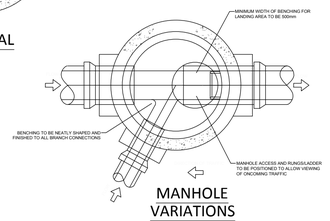

MANHOLE VARIATIONS

TABLE NO. 1

DIA. OF LARGEST PIPE IN MH (mm)	MINIMUM INTERNAL DIAMETER OF MH (mm) TYPE J
LESS THAN 600	1200
600	1200
675	1350
750	1350
900	1500
1050	2100
1200	2100

TABLE NO. 2

DIA. OF PIPE (mm)	LENGTH OF ROCKER PIPE (mm)
150-600	600
675-750	1000
>750	1250

MANHOLE TYPE J
(1200mm - 2100mm Ø)

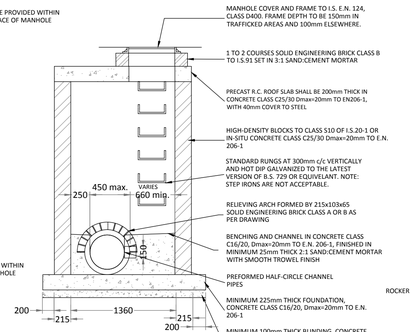

PLAN

SECTION A-A

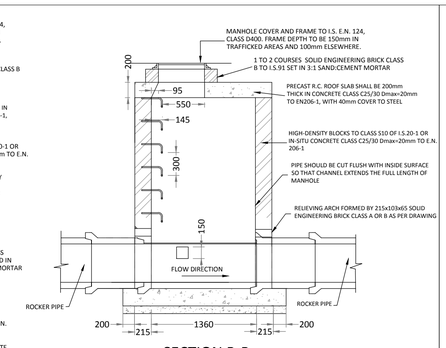

SECTION B-B

1360x1360 MANHOLE TYPE B

FOR PIPE DIA. 225 TO 450
DEPTH TO INVERT 3m TO 6m

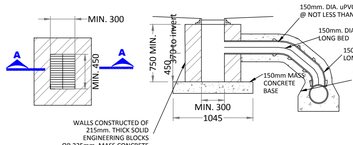

PLAN

SECTION A-A

GULLY DETAIL

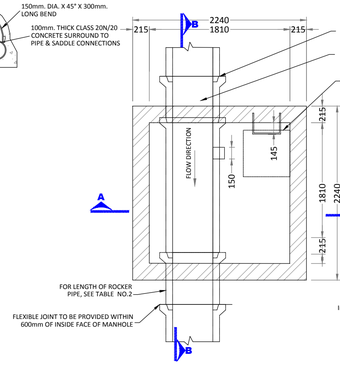

PLAN

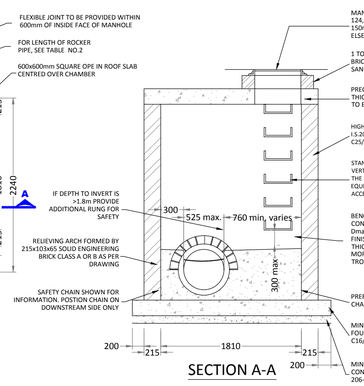

SECTION A-A

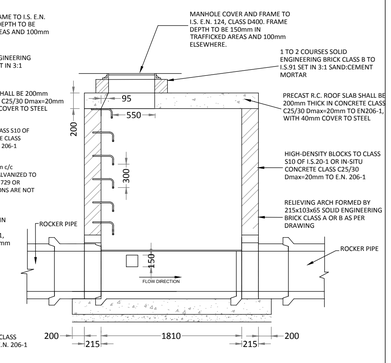

SECTION B-B

1810x1810 MANHOLE TYPE D

FOR PIPE DIA. >525
DEPTH TO INVERT >6m

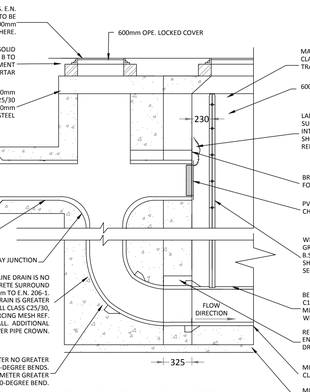

BACKDROP DETAIL

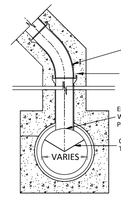

SADDLE CONNECTION TO CIRCULAR SEWER

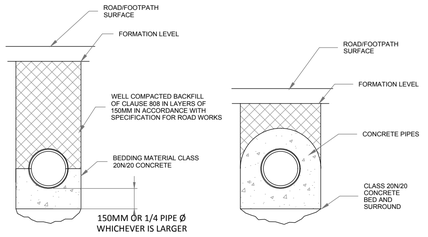

If depth of cover>1.2m

If depth of cover<1.2m

ROAD & FOOTPATH PIPE BEDDING DETAILS

Inlet Dia. mm	Drop Dia. mm
225	300
300	375
375	375
450	450
525	450
600	450
750	600

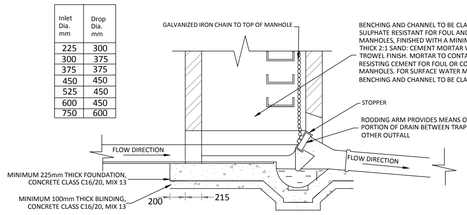

INTERCEPTOR TRAP DETAIL

FOR PIPE DIA. 150, 225, 300, 375,
450, 525, 600 & 750mm

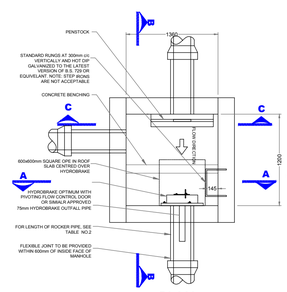

PLAN

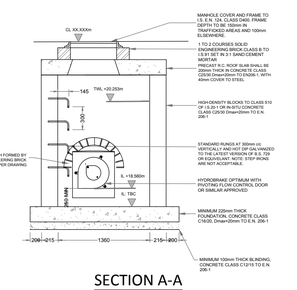

SECTION A-A

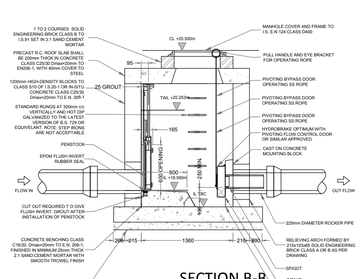

SECTION B-B

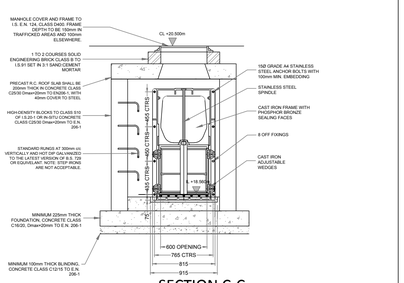

SECTION C-C

TYPICAL HYDROBRAKE MANHOLE

Hydrobrake Technical Specification		
Control Point	Head (m)	Flow (l/s)
Design Point	XXXX	XXXX
Flush Flow	XXXX	XXXX
Kick Flow	XXXX	XXXX
Mean Flow Overhead Range		XXXX
Hydrobrake Physical Specification		
Min. Block Width	XXXXm	
Min. Block Height	XXXXm	
Min. Outlet Diameter	XXXXm	
Max. Outlet Diameter	XXXXm	

BBA APPROVED
XXXXXXXXXXXXXXXX
HYDRO-BRAKE OPTIMUM™

NOTE : A PRE FORMED HYDRO-BRAKE® CHAMBER BASE IS AVAILABLE FROM HYDRO INTERNATIONAL WITH HYDRO-BRAKE OPTIMUM™ PRE-FITTED

NOTES:

1. DO NOT SCALE FROM THIS DRAWING. USE STATED DIMENSIONS ONLY. IF IN DOUBT, CONSULT THE ENGINEER.
2. LEVELS REFER TO O.S. DATUM MALIN HEAD.
3. THIS DRAWING SHALL BE READ IN CONJUNCTION WITH THE SPECIFICATION.
4. FOR ALL INLETS, OUTLETS AND BRANCHES MATCH CROWN LEVELS UNLESS INDICATED OTHERWISE ELSEWHERE.
5. BLINDING CONCRETE SHALL BE CLASS C12/15 TO E.N. 206-1. BLINDING SHALL BE A MINIMUM THICKNESS OF 100mm.
6. FOUNDATION CONCRETE SHALL BE CLASS C16/20 Dmax=20mm TO E.N. 206-1. FOUNDATIONS SHALL BE A MINIMUM THICKNESS OF 225mm.
7. COVER SLABS AND REDUCING SLABS TO BE CONSTRUCTED TO I.S. E.N. 1917 AND I.S. 420 2004
8. MANHOLES TO BE SURROUNDED WITH A MINIMUM OF 150mm THICK CONCRETE CLASS C16/20 Dmax=40mm TO E.N. 206-1
9. BENCHING AND PIPE CHANNEL PIPE SURROUND - CONCRETE CLASS C16/20 Dmax=20mm TO E.N. 206-1.
10. BENCHING FINISHED IN MINIMUM 25mm THICK 2:1 SAND:CEMENT MORTAR WITH A SMOOTH TROWEL FINISH, AT 1 IN 30 SLOPE TOWARDS CHANNEL.
11. 1 T O 2 COURSES OF SOLID ENGINEERING BRICKS CLASS B TO I.S.91:1983 SET IN 3:1 SAND: CEMENT MORTAR.
12. MANHOLE COVERS AND FRAMES TO BE CLASS D400 OR E600 TO I.S. E.N. 124. 150mm DEEP FRAME FOR ROADS AND 100mm DEEP FOR FOOTPATHS AND GREEN AREAS. NON-ROCK DESIGN, CLOSED KEYWAYS, MANUFACTURED FROM SPHEROIDAL GRAPHITE CAST IRON (DUCTILE CAST IRON), COVER AND FRAME COATED IN BITUMEN OR OTHER APPROVED MATERIAL. COVER TO HAVE A MINIMUM MASS OF 140kgm². FRAME BEARING AREA SHALL BE 80,000mm² MINIMUM. FRAMES SHALL BE DESIGNED TO PREVENT COVERS FALLING INTO MANHOLE. FRAMES SHALL BE BEDDED ON APPROVED MORTAR TO MANUFACTURES INSTRUCTIONS.
13. MANHOLE COVERS, FRAMES, REGULATING COURSES AND SLAB OPES TO PROVIDE CLEAR OPENING OF 600mmX600mm (OR 600mm DIAMETER). WHERE DEPTH OF COVER TO CROWN OF PIPE IS LESS THAN 2.0m, CLEAR OPENING TO BE 900mmX900mm (OR 900mm DIAMETER).
14. SAFETY CHAINS TO BE PROVIDED ON PIPES THAT EXCEED 450mm IN DIAMETER. MILD STEEL SAFETY CHAIN SHALL BE 10mm NOMINAL SIZE GRADE M(H) NON-CALIBRATED CHAIN, TYPE 1, COMPLYING WITH B.S.4942 PART 2 OR EQUIVALENT.
15. STANDARD RUNGS AT 300mm c/c VERTICALLY AND GALVANIZED TO THE LATEST VERSION OF B.S. 729 OR EQUIVALENT. NOTE: STEPS IRONS ARE NOT ACCEPTABLE.
16. LADDER STRINGERS SHOULD BE ADEQUATELY SUPPORTED FROM THE MANHOLE WALL AT INTERVALS OF NOT MORE THAN 2.0m STRINGERS SHOULD BE BOLTED TO CLEATS TO FACILITATE RENEWAL.
17. DISTANCE FROM THE TOP RUNG OF THE LADDER TO GROUND LEVEL MUST BE A MAXIMUM OF 500mm.
18. ALL LADDERS, RUNGS, HANDRAILS, SAFETY CHAINS ETC SHALL BE HOT DIP GALVANIZED TO B.S.729 OR EQUIVALENT.
19. MANHOLE OPENINGS TO BE SITUATED FURTHEST FROM THE NEAREST CARRIAGEWAY. MANHOLE STEPS / ACCESS TO BE POSITIONED TO ALLOW VIEWING OF ONCOMING TRAFFIC.
20. SHORT LENGTH PIPE AND PIPE JOINT EXTERNAL TO MANHOLE SHALL NOT EXCEED 600mm FROM THE INNER FACE OF MANHOLE WALL.
21. BLOCK WORK SHALL BE BEDDED AND JOINTED USING MORTAR TO I.S. 406. BEDS AND VERTICAL JOINTS SHALL BE COMPLETELY FILLED WITH MORTAR AS THE BLOCKS ARE LAID. JOINTS SHALL BE FLUSH POINTED AS THE WORK PROCEEDS.
22. RELIEVING ARCH FORMED BY 215x103x65 SOLID ENGINEERING BRICK CLASS A OR B AS PER DRAWING. RELIEVING ARCHES USED IN BRICK OR BLOCK WORK MANHOLES EXTEND OVER FULL THICKNESS OF WALL. A DOUBLE ARCH IS TO BE FORMED FOR PIPE DIAMETERS GREATER THAN 600mm.
23. ALL MANHOLES TO BE WATERTIGHT TO THE SATISFACTION OF THE ENGINEER.

TABLE NO. 2

DIA. OF PIPE (mm)	LENGTH OF ROCKER PIPE (mm)
150-600	600
675-750	1000
>750	1250

TABLE NO.3

Diameter of Incoming Pipe (mm)	Diameter of Backdrop Pipe (mm)
100	100
150	150
225	300
300	375
375	375
450	450
525	450
600	450
750	600

ALL FOUL MANHOLES MUST BE FACED IN SOLID ENGINEERING BRICK (MIN. CLASS A OR B), OR IN-SITU CONCRETE FOR 1 METRE ABOVE BENCHING LEVEL. BRICK TO BE BONDED TO BLOCK WORK USING ENGLISH GARDEN WALL BOND.

PLANNING DRAWING.
NOT FOR CONSTRUCTION.
ALL LEVELS GIVEN ARE
RELATIVE TO ORDNANCE DATUM.
THIS DRAWING HAS BEEN ISSUED FOR INFORMATION PURPOSES ONLY AND MUST NOT BE USED FOR CONSTRUCTION UNDER ANY CIRCUMSTANCES

ORDNANCE SURVEY OF IRELAND LICENCE NO. EN0000818 © GOVERNMENT OF IRELAND

- FOR SETTING OUT REFER TO ARCHITECT'S DRAWINGS.
- THIS DRAWING TO BE READ IN CONJUNCTION WITH ALL OTHER ARCHITECTURAL AND ENGINEERING DRAWINGS AND ALL OTHER RELEVANT DRAWINGS AND SPECIFICATIONS.
- DO NOT SCALE THIS DRAWING. USE FIGURED DIMENSIONS ONLY.
- NO PART OF THIS DOCUMENT MAY BE REPRODUCED OR TRANSMITTED IN ANY FORM OR STORED IN ANY RETRIEVAL SYSTEM OF ANY NATURE WITHOUT THE WRITTEN PERMISSION OF O'CONNOR SUTTON CRONIN AS COPYRIGHT HOLDER EXCEPT AS AGREED FOR USE ON THE PROJECT FOR WHICH THE DOCUMENT WAS ORIGINALLY ISSUED.

Rev No.	Date	Revision Note	Drn by	Chkd by
P01	31.05.18	ISSUED FOR PLANNING	JS	MK
P02	08.06.18	SUITABLE FOR REVIEW/COMMENT	JS	AH
C01	19.06.18	ISSUED FOR PLANNING	JS	AH
P03	19.09.18	SUITABLE FOR REVIEW/COMMENT	IK	MK
P04	15.10.18	SUITABLE FOR REVIEW/COMMENT	JS	MK
P05	26.10.18	SUITABLE FOR REVIEW/COMMENT	OG	MK
C02	14.11.18	STAGE COMPLETE – PLANNING	AF	MK

Rev No.	Date	Revision Note	Drn by	Chkd by

ENVIRONMENT IS EN ISO 14001:2004 NSAI Certified
QUALITY IS EN ISO 9001:2008 NSAI Certified
HEALTH & SAFETY OHSAS 18001:2007 NSAI Certified
bsi. BIM Maturities Level 2 Construction Capital Delivery PAS 1192-2

Head Office,
9 Prussia Street,
Dublin 7.
D07 KT57

TEL +353 (0)1 8682000

e: contactus@ocsc.ie
w: www.ocsc.ie

OCSC O'CONNOR | SUTTON | CRONIN
Multidisciplinary Consulting Engineers

Dublin | London | Belfast | Galway | Cork

Client: ATLAS GP LTD
Project: BELGARD GARDENS TALLAGHT PHASE 1
Title: PROPOSED DRAINAGE TYPICAL DETAILS

Code	Originator	Zone	Level	Type	Role	Number	Status	Revision
A557	OCSC	XX	XX	DR	C	0520	A1	C02

Date: MAY '18 Scale: NTS @ A1 Drn by: JS Chkd by: MK Aprvd by: AH